COOL HEAD

DISPLAY | Countertop Displays

REFRIGERATED SHOWCASES UPRIGHT ▶ BLACK

RC 78B

+2° | +12°

GAS R600a | H1 +1°C +10°C | C ENERGY CLASS | 4 +30°C/55RH | LED

DETAILS

Door handle

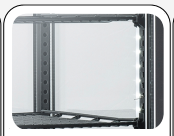

Inner vertical LED light

Digital Thermostat

GENERAL FEATURES

- 78 Lt. Upright refrigerated showcase (Black Color) •
- Flat glass with black frame and plastic basement •
- Ventilated Cooling •
- Automatic compressor cycle defrost •
- Digital display control •
- Interior LED light •
- Toughened safety glass •
- Adjustable shelves (N.3 Pcs) •
- N.4 fix support assembled under the basement •
- Energy efficiency class: C •

PRODUCT DIMENSIONS

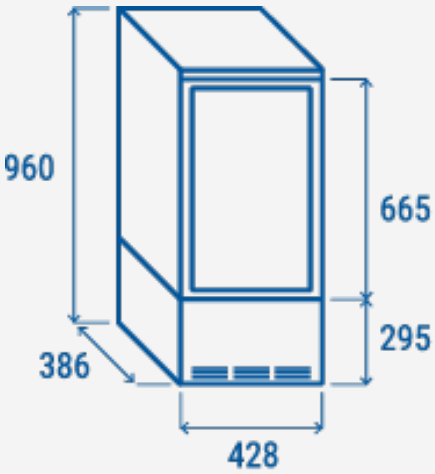

TECHNICAL SPECIFICATIONS

Capacity	**78 L**
Temperature	**H1 (+1°C~+10°C)**
Consumption	**2.748 kWh/24h**
Rated Power	**180 W**
Noise level	**43 dB(A)**
Net Weight	**34 Kg**
Gross Weight	**41 Kg**
External Dimensions (WxDxH mm)	**428x386x960**
Internal Dimensions (WxDxH mm)	**400x370x600**
Packaging dimensions (WxDxH mm)	**475x432x1158**
Loading quantities 20'/40'/40'HQ	**126/252/252**

CERTIFICATION

CE RoHS

COOL HEAD EUROPE
We make the world a cooler place

www.coolheadeurope.com